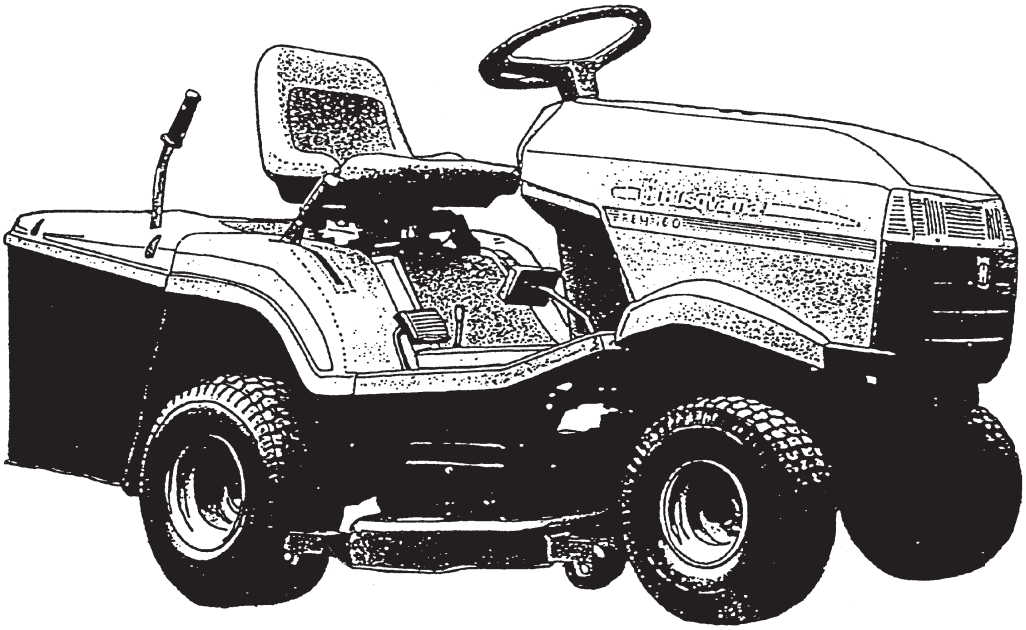

# CTH-180 (V), CTH-180 (I)

## Operator´s manual

Please read these instructions carefully and make sure you understand them before using the machine.

101 90 15-26

# TABLE OF CONTENTS


INTERNATIONAL SYMBOLS ..... 1
SAFETY RULES ..... 2
ASSEMBLY ..... 3
OPERATION ..... 7
MAINTENANCE ..... 12
ADJUSTMENTS ..... 17
WIRING DIAGRAM ..... 21
TROUBLESHOOTING GUIDE ..... 22
STORAGE ..... 24
TECHNICAL SPECIFICATIONS ..... 25


Read this manual carefully so that you will know how to assemble, use and maintain this unit.
Fill in and mail the registration card provided with the unit. For service other than described in this manual, contact an authorized service dealer. He will provide you with parts and service.

Note: This lawn tractor is equipped with a combustion engine, which should not be used near any land covered with grass or brush, unless the engine's exhaust system is equipped with a spark arrester meeting local laws. The operator should maintain the spark arrester in effective working order.

# INTERNATIONAL SYMBOLS

These symbols appear on your unit and in the supplied documentation.
You should learn and understand their meaning.

Read operator´s manual.

Reverse

Neutral

Transport position

Forward

Fast

Slow

Engine Off

Do not smoke

Choke

Engine start

Brake to STOP

Brake release

Mower Height

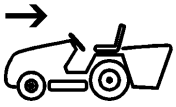

Reverse

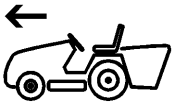

Forward

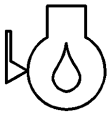

Check engine

Engine run

Keep hands out

Clutch Disengage

Parking brake

Brake

Warning

Never leave tractor when running

Noise level

Rotating Blades

European machinery directive for safety

Never drive across a slope

Never use the cutter if there are people, especially children, or pets, in the vicinity.

Never camy passengers

Do not raise up

# SAFETY RULES

These instructions are for your protection. You should read them carefully.

**WARNING: This lawn tractor is able to cut hands, feet, and throwing objects. If you do not follow the safety instructions, you could experience serious injuries.**

1. GENERAL OPERATION:
- Know controls and how to stop quickly.
- Read, understand, and follow all instructions in the manual and on the machine before starting.
- Only allow responsible adults, who are familiar with instructions, to operate the machine.
- Wear safety glasses or eye shields when assembling or operating the machine.
- Do not operate machine when barefoot. Always wear substantial footwear, preferably steel-toed shoes.
- Do not wear loose fitting clothing that could get caught in moving parts.
- Clear the area of objects such as rocks, toys, wires, etc., which could be picked up and thrown by the blades.
- Be sure the area is clear of other people before mowing.
- Stop machine if anyone enters the area.
- Never carry passengers.
- Do not mow in reverse unless absolutely necessary.
- Always look down and behind before and while backing.
- Be aware of the mower discharge and do not point it at anyone.
- Do not operate the mower without the entire grass collector.
- Slow down before turning.
- Never leave a running machine unattended. Always turn off blades, set parking, stop engine, and remove keys before dismounting.
- Turn off blades when not mowing.
- Stop engine before removing grass collector.
- Mow only in day light or good artificial light.
- Do not operate the machine while under the influence of alcohol or drugs.
- Watch for traffic when operating near or crossing roadways.
- Use care when mowing around a fixed object to prevent the blades from striking it. Never deliberately run over any foreign object.
- Use extra care when loading or unloading the machine into a trailer or truck.
- Use care when pulling loads or using heavy equipment.
  a. Use only approved drawbar hitch points.
  b. Limit loads to those that you can safely control.
  c. Do not run sharply. Use care when backing.
  d. Use counterweights, wheel weight when suggested in attachments instructions.

2. SLOPE OPERATION

Slopes are a major factor related to loss-control and tip-over accidents, which can result in severe injury or death. All slopes require extra caution. If you cannot back up the slope or if you feel uneasy on it, do not mow it.

DO
- Mow up and down, not across.
- Remove obstacles such as rocks, tree limbs, etc.
- Watch for holes, ruts, or bumps. Uneven terrain could overturn the machine. Tall grass can hide obstacles.
- Use slow speed. Choose a low gear so that you will not have to stop or shift while on slope.
- Follow the manufacturer's recommendations for wheel weights or counterweights to improve stability.
- Use extra care with grass collector or other attachment. This can change the stability of the machine.
- Keep all movements on the slope slow and gradual. Do not make sudden changes in speed or direction.
- Avoid starting or stopping on a slope. If tires lose traction, turn off the blades and proceed slowly down the slope.

DO NOT
- Do not turn on slopes unless necessary, and then slowly and gradually downhill, if possible.
- Do not mow near drop-off, ditches or embankments. The mower could suddenly turn over if a wheel is over the edge of a cliff or ditch, or if an edge caves in.
- Do not mow on wet grass. Reduced traction could cause sliding.
- Do not try to stabilize the machine by putting your foot on the ground.

3. CHILDREN

Tragic accidents can occur if the operator is not alert to the presence of children. Children are often attracted to the machine and the mowing activity. Never assume that children will remain where you last saw them.
- Keep children out of the mowing area and under the watchful care of another responsible adult.
- Be alert and turn machine off if children enter the area.
- Before and when backing, look behind and down for small children.
- Never carry children. They may fall off and be seriously injured or interfere with safe machine operation.
- Never allow children to operate the machine.
- Use extra care when approaching blind corners, shrubs, trees, or other objects that may obscure vision.

4. SERVICE
- Use extra care in handling gasoline and other fuels.
  a. Use only an approved container
  b. Never remove gas cap or add fuel with the engine running. Allow engine to cool before refuelling. Do not smoke.
  c. Never refuel the machine indoors.
  d. Never store the machine or fuel container inside where there is an open flame, such as in water heater.
- Check fuel supply before each use allowing space for expansion as the heat of the engine and sun can cause gasoline to expand and overflow the tank.
- Use extra care when handling battery acid. Acid contact with skin may cause severe burns. Eye contact may cause blindness.
- Use extra care when servicing the battery. Explosive gas is produced in the battery. Do not service the battery while smoking or near open spark or flame. This may cause the battery to explode causing serious injury.
- Never run a machine inside a closed area. Exhaust fumes contain carbon monoxide, an odourless and deadly gas.
- Keep nuts and bolts, especially blade attachments bolts, tight and keep equipment in good condition.
- Never tamper with safety devices. Check their operation regularly.
- Do not change the engine governor settings or overspread engine.
- Reduce fire hazards. Keep machine free of grass, leaves, or other debris build-up. Clean up oil or fuel spillage. Allow machine to cool before storing.
- Stop and inspect the equipment if you strike an object. Repair, if necessary, before restarting.
- Never make adjustments or repairs with the engine running.
- Grass collector components are subjects to wear, damage, and deterioration, which could expose moving parts or allow objects to be thrown. Frequently check components, and replace with manufacturer's recommended spare parts, when necessary.
- Mower blades are sharp and can cut. Wrap the blades or wear gloves, and use extra caution when servicing them.
- Check brake operating frequently. Adjust and service as required.

**THIS SYMBOL MEANS THAT IMPORTANT SAFETY PRECAUTIONS HAVE TO BE POINTED OUT. YOUR SAFETY IS INVOLVED.**

# ASSEMBLY

## UNPACKING

The tractor is not completely assembled at the factory, for transportation reasons.

After removing the packaging, check the machine for any damage during the shipment, locate the hardware bag and loose parts. Take care while removing the machine from the pallet, to avoid any damage to the mower deck.

## STANDARD PACKING

- tractor
- steering wheel
- seat with holder
- battery
- grass collector
- trailer hitch
- bag with operator's manual, parts manual, 2 keys for ignition, 1 decal with an arrow.
- hardware bag for grass collector

## IDENTIFICATION

The tractor identification plate is located under the driver´s seat and behind the battery. Make a note of the serial number on this page. This serial number will have to be guoted when contacting your distributor for service and ordering spare parts for the tractor. See fig. 1.

Serial No.: .....

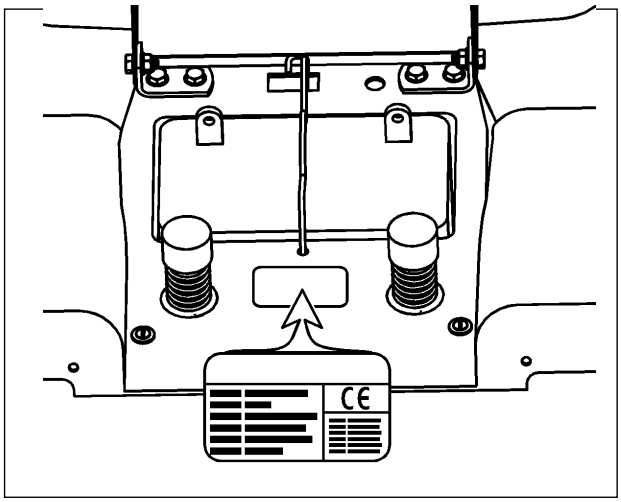


*Fig. 1: Identification plate*

## STEERING WHEEL (FIG. 2)

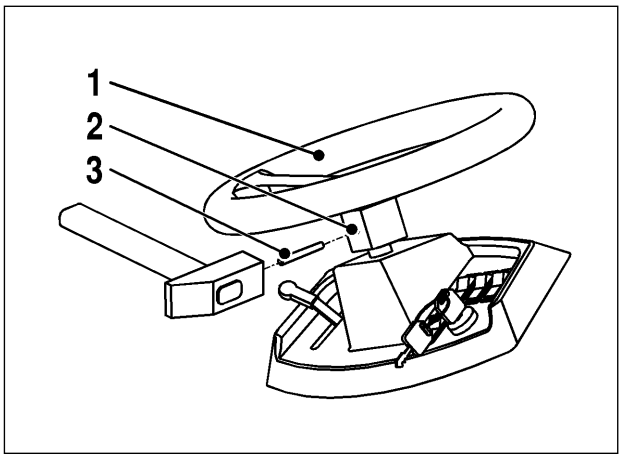


*Fig. 2*

Proceed to the following steps:

1. Straighten the front wheels.
2. Align the holes of the steering wheel with the hole in the steering shaft.
   MAKE SURE THE STEERING WHEEL IS CENTERED AND THE HOLES LINED UP.
3. Insert the lock pin through the holes, and drive it through the holes with a hammer.

## SEAT (FIG.3)

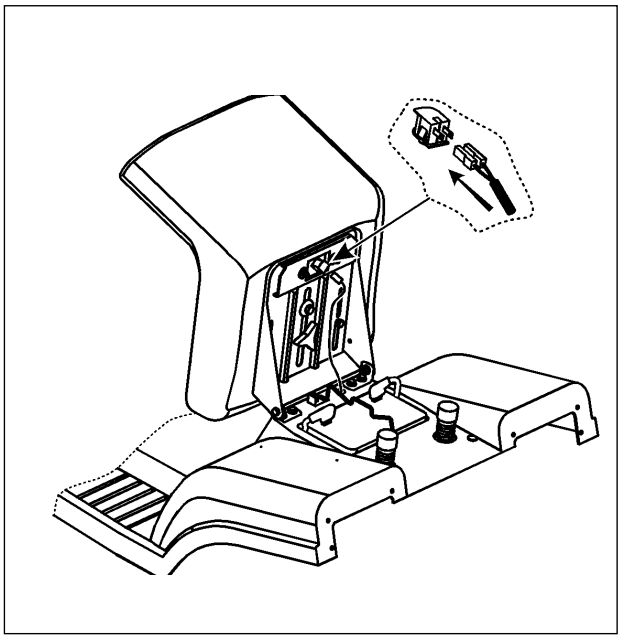

*Fig. 3*

Proceed to the following steps:

1. Discard the plastic protection from the seat.
2. Loosen both nuts from the seat hinges on the tractor.
3. Place the seat and tighten securely with two bolts, flat and spring washers.
4. Connect the safety switch.

## TRAILER HITCH (FIG. 4)

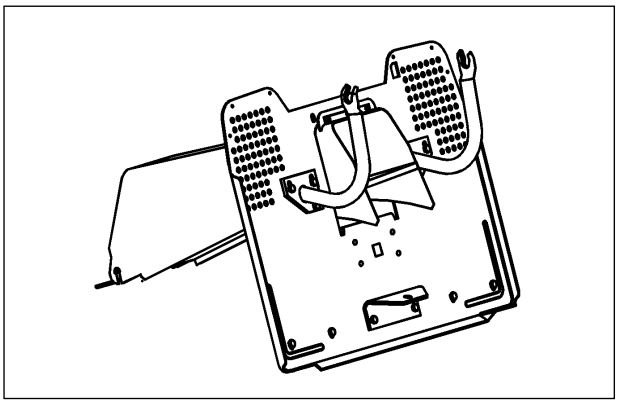

*Fig. 4*

Proceed to the following steps:
1. Remove two bolts from the grass collector support plate on the rear side of the tractor.
2. Place trailer hitch in place.
3. Replace bolts, washers and nuts. Tighten securely.

## GRASS COLLECTOR BAG (FIG. 5)

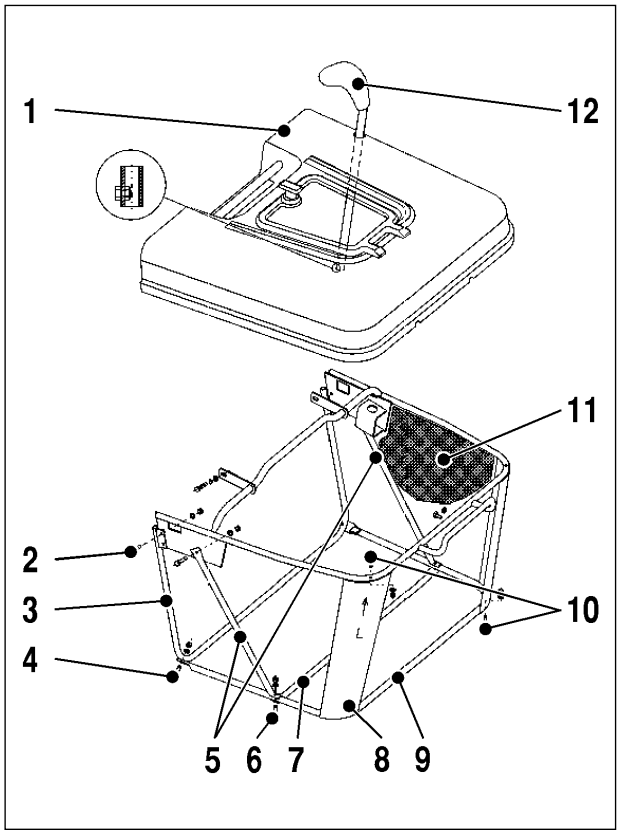


*Fig. 5*

The grass collector has been pre-assembled. However, to assemble it correctly (to fit the collector cover with tractor fenders). It is recommended to follow the instructions below:

1. Take the pre-assembled basket (item 1) out the box, tilt the front tube (item 3), insert the upper bolts (item 2) and tighten loosely.
2. Put the grass container, prepared in such a way, on the basket supports on the rear part of the tractor and adjust with the fenders. Tighten the bolts (item 2) properly.
3. Stretch the bag (item 3) with your hand and put it on the rear handle, with the inlet hole of the basket upwards. Insert the bottom tube (item 9) into the bag, unscrew the nuts M5 of the bolts (item 10) under the basket cover and insert the corner supports (item 8) under the tubes at the top, screw on the nuts M5 on the bolts (item 10) and (item 4) and tighten, loosely.
4. Tilt the left and right supports (item 5). Put in place the lower brace (item 7) from the outside of the grass collector bag and secure them with screw (item 6) loosely.
5. Place the grass collector, hinge it on the tractor supports and check the fit between the grass collector cover and fenders. With a regard of the loose screws you can adjust the fit between the cover and fenders.
6. If it is not possible, with the help of the method above, to accomplish the correct fit between the tube frame and the tractor rear adjust, move the supports on the tractor by moving them up or down.
7. Remove the grass collector, tighten all screws securely and fix the grass collector bag to the tube frame with plastic clips.
8. Slip the dumping lever (item 12) through the hole of the collector cover and tube frame, secure it with screws M5x 12 and nuts MS (the nuts are located inside the tube).

NOTE: After assembling check all the screws and nuts for tightening.

## PLACING THE GRASS COLLECTOR ON THE TRACTOR (FIG. 6)

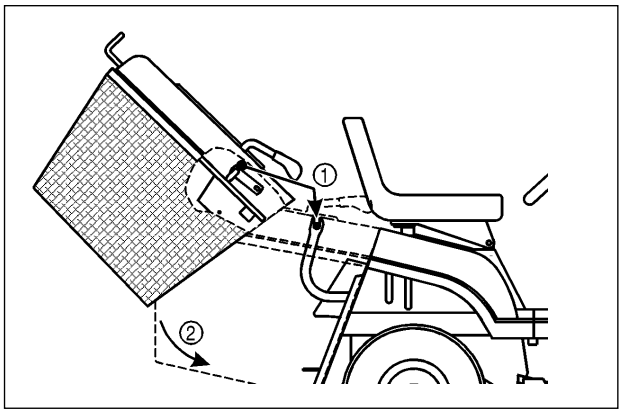


*Fig. 6*

Proceed to the following steps:

1. Lift the grass collector assembly with both hands. Slant it to an angle of approximately 40° (fig. 6).
2. Slide the grass collector on the two support brackets located on the rear of the tractor.
3. When the grass collector is properly positioned, place the decal with the triangle symbol directly opposite to the symbol on the rear of the tractor. This will assist alignment in the future (Fig. 7).

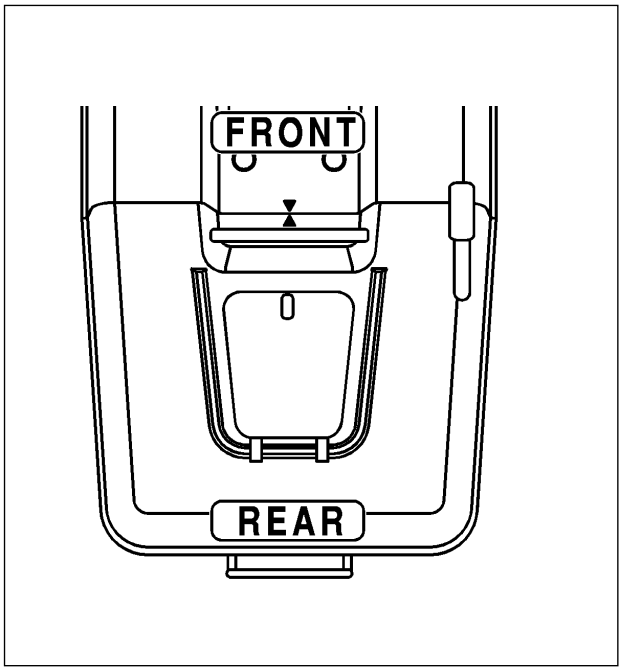


*Fig. 7*

**WARNING**

This tractor is equipped with a safety micro-switch and the cutting system will not function when the grass collector assembly is not in place. Do not tamper with this micro-switch.

## PREPARATION BEFORE THE FIRST OPERATION

The tractor is shipped without gas, oil and electrolyte in the battery, for safety reasons.

**DANGER**

Lead acid batteries generate explosive gases. Keep sparks, flame, and smoking materials away from batteries. Always wear eye protection when around batteries.

## BATTERY PREPARATION

Battery provides maintenance free performance. Flush cover battery is completely leakproof and spillproof when tipped to a 45 degree angle, so you do not have to worry about electrolyte leakage when performing routine maintenance.
The battery is placed under the seat, and can be accessed by tilting the seat in the upright position (Fig. 8).

NOTE: The battery is shipped with electrolyte!

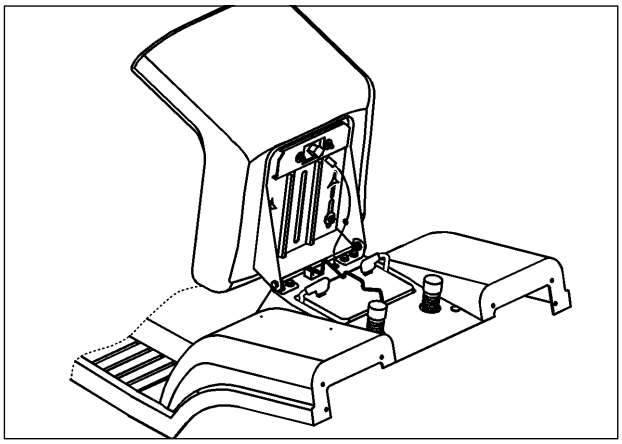

*Fig. 8*

**CHECK THE BATTERY**

If it is necessary proceed to the following steps:

1. Remove the battery from the tractor.
2. Charge the battery at a rate of 6 amps for 1 hour. Use a 12-volt battery charger. Observe all precautions required for battery charging. Complete the assembly of your unit while waiting for battery to charge.
3. Check battery case for leakage to make sure that no damage has occurred while handling.
4. Reinstall the battery and secure it with the spring lever (see fig. 8).

**DANGER**

Electrolyte is a dangerous acid and poisonous. Always wear eye protection. Protect your skin when handling acid or battery.

**POISON/DANGER-CAUSES SEVERE BURNS**

Contains sulfuric acid. Avoid contact with skin, eyes or clothing. To prevent accidents, neutralize excess acid with baking soda and rinse empty container with water.

**ANTIDOTE**

**External:** Flush with water.
**Internal:** Drink large quantities of water or milk. Follow wiyh milk of magnesia, beaten eggs or vegetable oil. Call a physician immediately.
**Eyes:** Flush with water for 15 minutes and get prompt medical attention.

**KEPP OUT OF YHE REACH OF CHILDREN**

## TO SERVICE THE ENGINE

NOTE: The engine is shipped with oil.
Fill crankcase with only 15W30 Oil. Do not overfill or it causes serious damage to the engine.

Before starting the engine, read carefully the engine manual.

## GAS FILLING

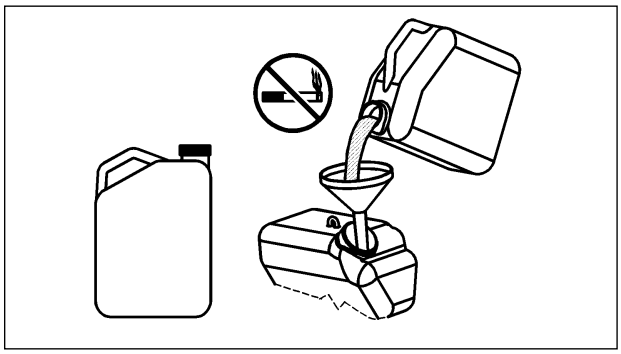

*Fig. 9*

Use only regular unleaded gasoline.
The recommended lowest octane level is 95.
If the engine runs on petrol with a lower octane level than 95, an effect known as knocking can arise. This leads to arise in the level of the engine temperature and can cause engine failure.

## REFUELLING

**WARNING**

Make sure there is good air ventilation when refuelling.

1. Stop the engine and let it cool down.
2. Open the petrol cap slowly in order to release any possible high pressure.
3. Tighten the petrol cap carefully after refuelling.
4. Dry around the area of the petrol cap. Clean the fuel tank regularly. Impuritier in the tank can cause running problems.

For refuelling, use approved container with funnel. Do not overfill the tank, which contains approx. 8 litre.

**DANGER**

Use extra care in handling fuels. They are flammable, vapours are explosive. Allow the engine to cool down before refuelling. Do not smoke. Use safety approved container only to store your gasoline.

In the operator´s manual for the engine, you will find fuel and oil recommendations.

## TYRES

Proceed to the following steps:

1. Check the tyres pressure: 120 kPa (1,2 BAR) for the front wheels; 100 kPa (1,0 BAR) for the rear wheels.
2. Adjust pressure up or down if necessary.

NOTE: The tyre pressure is important for an even cut.

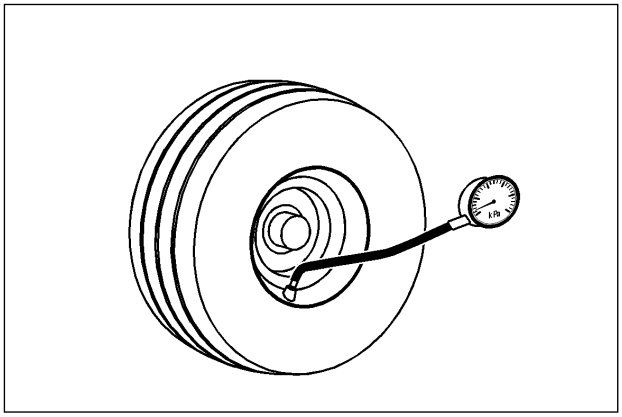

*Fig. 10*

## CONTROLS

1. Dash panel (fig. 11)
   a. throttle control lever
   b. ignition switch
   c. headlight switch
   d. switch MAN-AUTO, collector fill gauge
   e. re-engage switch
   f. ON/OFF switch, cutting system.
2. Steering wheel
3. Choke control
4. Cutting height adjustment lever

5a. Forward speed pedal
5b. Reverse speed pedal

6. Parking brake lever
7. Brake pedal
8. Transmission disengagement lever

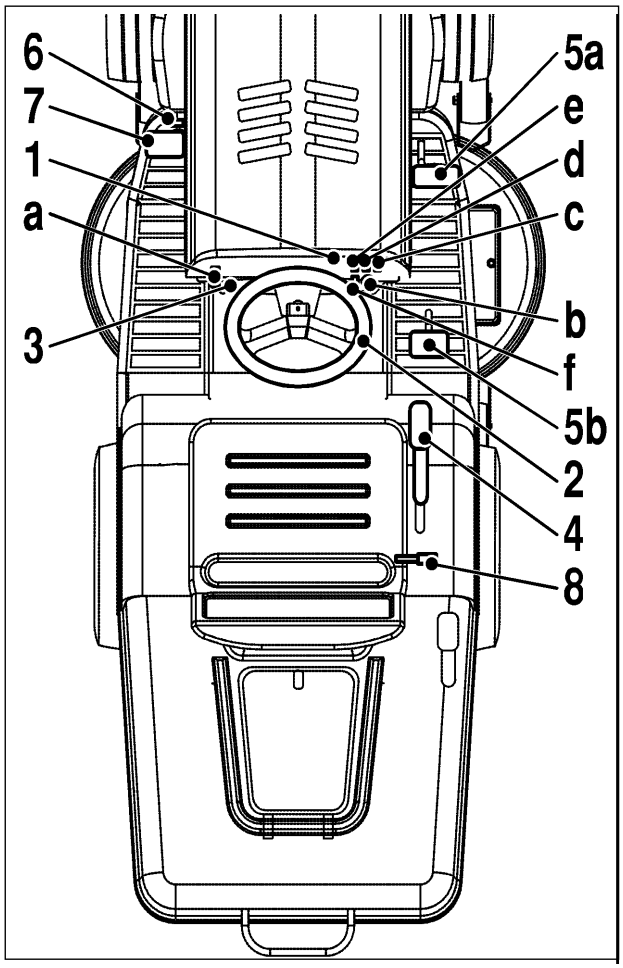


*Fig. 11*

## OPERATION AND DESCRIPTION (FIG. 11)

**TOGGLE SWITCH CUTTING SYSTEM (f)**
The mower clutch switch is secured in the off position, in order to avoid accidental engagement. To engage, pull up the switch lever, and place it in the ON position; this actuates the cutting system clutch, which drives the blades (fig.16).

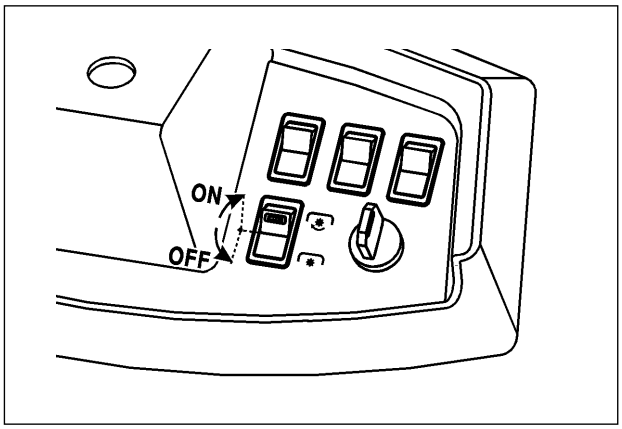


*Fig. 16*

**MAN/AUTO SWITCH (d)**
When in AUTO position, the automatic control of the grass collector filling is set. When the collector is full with grass clippings, the overload protection switch located inside the grass collector will be mechanically activated and the audible warning buzzer signal cycle should start after the 1 st second. After a 3 seconds period both the buzzer the cuting system will stop operation.

If it is the MAN position, then the overfill switch is disabled and the collector tunnel could severely clog.

**RE-ENGAGE SWITCH (e)**
This switch should be pressed to re-activate the MAN/ AUTO switch, after the grass collector is emptied.

## SEAT ADJUSTMENT (FIG. 12)

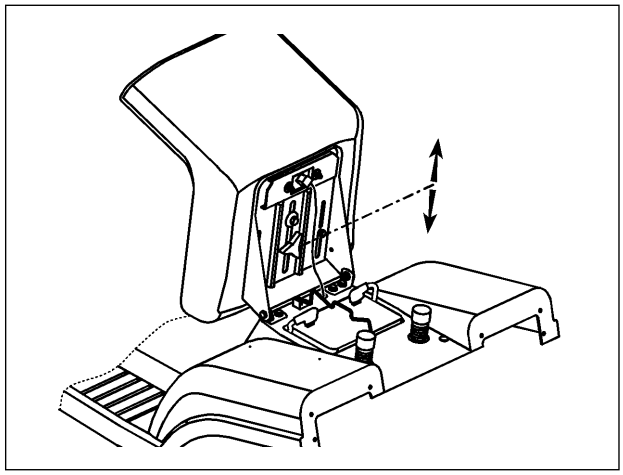

*Fig. 12*

In order to adjust the seat, proceed to the following steps:
1. loosen the thumb screw.
2. move the seat forward or backward to the desired position.
3. tighten thumb screw securely.

## TO START THE ENGINE

**DANGER**

Never run the engine indoors, or in enclosed or poorly ventilated areas. Engine exhaust contains carbon monoxide.

To start the engine, proceed as follows:

1. Open the fuel valve. The handle should point down as shown in the fig.13.

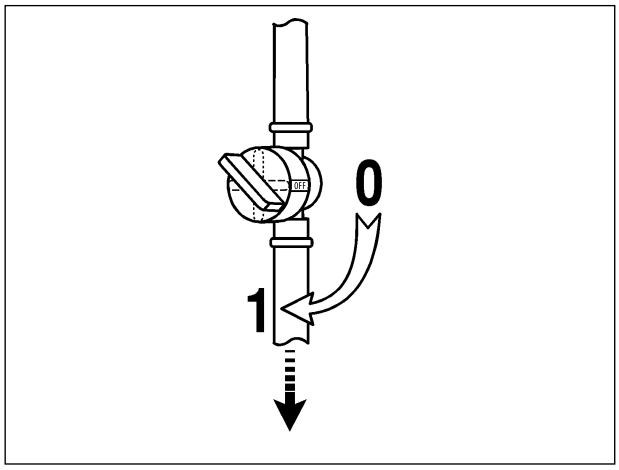


*Fig. 13*

2. Take a comfortable riding position on the seat. The safety switch is connected.

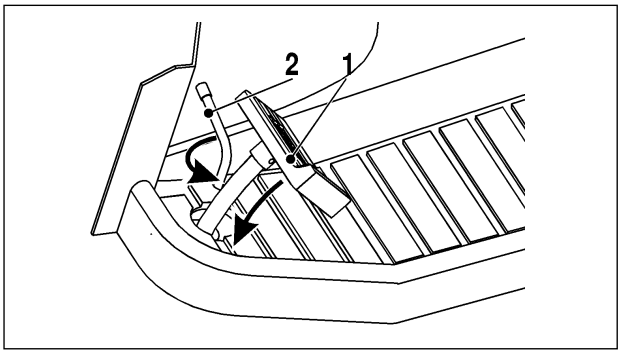


*Fig. 14*

3. Depress fully, and hold the brake pedal (fig. 14, pos 1).

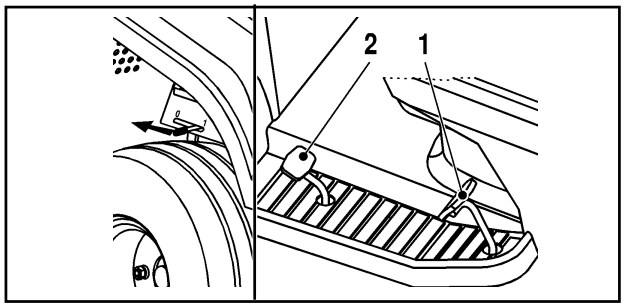


*Fig. 15*

4. Place the throttle lever at the ”turtle” symbol. Pull the choke control out.

5. Place the toggle switch ”cutting system” to OFF position. Fig. 16, pos. OFF

6. Turn the ignition key to START position (Fig. 18) release it immediately when the engine has started (Fig. 18). Continuous cranking of more than 15 seconds per minute can cause the starter to overheat. Allow the starter to cool down two minutes after cranking of more than 15 seconds.

7. After starting the engine slide the choke control to slow position and set the engine speed by the throttle lever (Fig. 17).

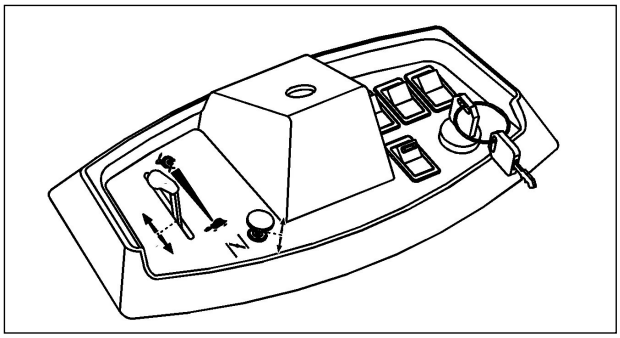

*Fig. 17*

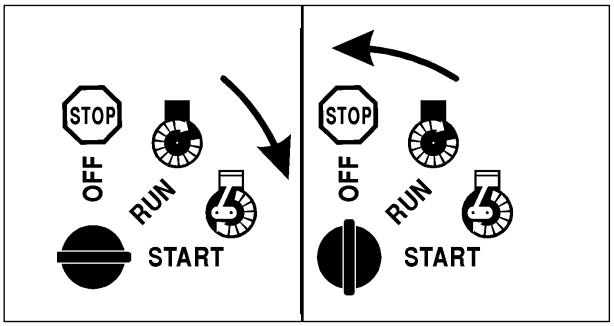


*Fig. 18*

**DANGER**

When you want to start the engine, be sure that:

- the brake pedal is depressed
- the mower clutch lever is in disengaged position
- the grass collector is properly in place

**DANGER**

Never run the engine indoors, or in enclosed or poorly ventilated areas. Engine exhaust contains carbon monoxide.
Keep feet, hands and clothes away from the engine. The temperature of the muffler may exceed 80°C.

**IMPORTANT**

Move the throttle to slow position before turning ignition off, in order to reduce muffler pop. Failure to do so will result in engine and exhaust damages.

**WARNING**

The mower deck must be in the highest position, when you drive the tractor in transport mode off the lawn. If not, damages will be caused to the blades.

## RIDING THE TRACTOR

The tractor is equipped with a hydrostatic transmission. It means that the forward and reverse speed can be achieved with the use of the pedals (Fig. 15).
The more depressed the pedals are, the faster the tractor moves. The tractor moves forward and reverse at the same speed.

**WARNING**

In case the tractor must be pushed, the transmission disengagement bypass lever must be put in the forward position.

## BRAKE (FIG. 14)

When the pedal is fully depressed, the brake is applied. Then, place the throttle lever at the "turtle" idle position (fig. 17).

The parking brake lever is used to lock the brake pedal in brake position (fig. 14; pos. 2).

## REVERSE GEAR (FIG. 15)

**CAUTION**

Come to a full stop before changing direction of motion.

Depress slowly the reverse movement pedal (Fig. 15, pos. 2).

**WARNING**

While riding backwards, watch out behind.
**Do not have your mower engaged!**

## LAWN CUTTING

**IMPORTANT**

- Clear the area of any objects, such as toys, wires, branches, etc.
- Do not wear loose clothes, which could be caught in moving parts.
- Always wear substantial footwear.
- Keep out children and animals, while riding.
- Keep hands and feet away from the mower deck.
- Never carry passengers.

Be sure the cutting system clutch is disengaged and is in the OFF position before starting engine (fig. 16).

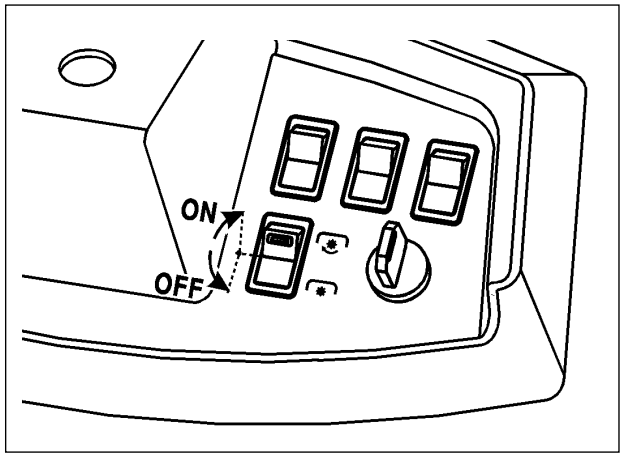


*Fig. 16*

## BLADES CHECK

Check the cutting blades periodically.
If dull, you will not get a nice event cut.
You must replace or sharpen the blades.
After sharpening, you must balance the blades before re-installation.

## CUTTING HEIGHT ADJUSTMENT (FIG.19)

The cutting height lever is located on the right side of fender.
The bottom position of the lever is the lowest cutting height, and vice versa.

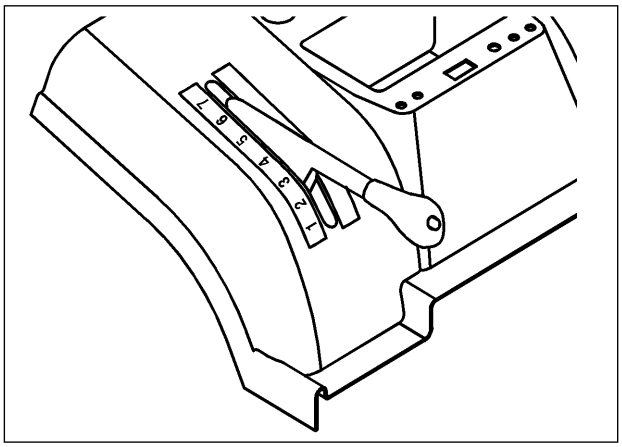


*Fig. 19*

## MOWER DECK GAUGE WHEELS (FIG. 20)

The mower deck gauge wheels must always be in the lower position. Refer to fig. 20.

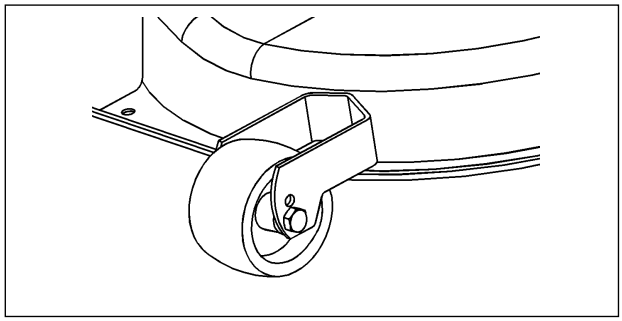

*Fig. 20*

**IMPORTANT**

Before starting cutting grass, take care of the proper positioning of the grass collector.

## RIDING AND MOWING

Proceed with the following steps:

1. Start engine and drive tractor to the lawn.
2. When on the lawn, engage mower clutch with toggle switch (fig. 16).
3. Switch the MAN/AUTO button to the lower AUTO position (fig. 11, d).
4. Depress slowly the forward movement pedal to reach the desired speed.

**IMPORTANT**

While starting the blades, keep the throttle in the middle position, to save the belt and clutch from premature wear and possible damage.

## SPEED RANGES

The slowest speed is used for mowing on slopes or mowing high wet grass.
The lower the grass is, the higher the speed should be.
When tractor is used for transport (not cutting). Depress the forward movement pedal for maximum speed.

ALWAYS: In case of any obstacles, immediately disengage the blades and lift the mower deck to the highest level.

**IMPORTANT**

As soon as the blades strike any solid object the shear bolts will break. Immediately stop the engine! Check the blades! Replace the broken shear bolts only with factory originals. Check to make sure that all blade mounting bolts are tightened.

## MOWING HINTS

1. We advise mowing the lawn in a longitudinal and cross direction, overlapping previous cut, which allows the lifting action of the blades into the cutting path.
2. Forward speed of the lawn tractor must be controlled in accordance with the type and quantity of grass being mowed.

**IMPORTANT**

The more grass that must be cut, the slower the forward speed should be.

## SLOPE OPERATION

- All slopes need extra caution.
- Do not cut grass, when slope is more than 10° (17%).
- Mow slopes, riding up and down, never across.
- Avoid sudden changes in direction.
- Remove obstacles such as rocks, tree limbs, ruts, etc.

**WARNING**

While travelling downhill, never coast! When parking, depress the brake pedal, and lock it (fig. 14, pos. 1 and 2).

## COLLECTOR DISCHARGING (FIG. 21)

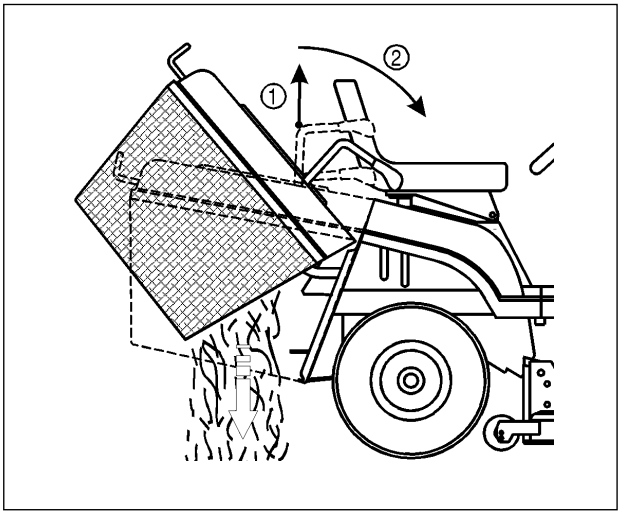


*Fig. 21*

In order to avoid clogging the grass collector, we suggest to keep the MAN/AUTO switch in the AUTO position. A micro switch controls this process and, when the grass collector is full, it declutches the blades and the buzzer comes on. Then, reduce the engine speed to idle, pull out the telescopic dumping lever all the way and push it down to empty the grass collector, then, slowly release the lever upwards to allow the grass collector to close. Push the RESET switch. Then, you can continue to mow.

NOTE:

A. If the holes on the grass collector bag are full of grass and dirty, you must clean all the collector bag by using pressured water and leave to dry.
B. From time to time, clean the area of the cover of the grass collector switch, mainly the bottom section.

## TUNNEL CLEANING

The cutting system will shut OFF automatically when the rear collector bag is full. If the automatic shut OFF does not work, then the tunnel air flow vent is plugged. Remove any debris that is trapped in the area of the microswitch..

## HEADLIGHT SWITCH

Lights are switched on with the switch (fig. 11, c) if the key is on position (fig. 18).

## SAFETY CONDITIONS

Remember your tractor is equipped with a seat switch; this means that when you leave the seat, the engine stops.
The mower blades stop when the grass collector is full of grass.
The engine cannot start when:

a. the seat is not weighted with a driver
b. the break pedal is not fully depressed (Fig 14)
c. the cutting switch is in ON position (Fig 16)

## STORAGE

After cutting is finished, lift the mower deck to the highest position, and stop the cutting system drive. Turn off the ignition switch, depress the brake-clutch pedal and lock it with the parking brake. Close the fuel valve.

**IMPORTANT**

Always remove the ignition key, before storing. When storing the tractor for longer periods of time disconnect the battery.

## TOWING

The tractor is equipped for towing attachments in the lower rear part of the tractor.
The maximum weight for the attachment is 150 Kg.

## CLEANING

**WARNING**

Before cleaning, washing, servicing or repairing, remove the ignition key!
Always wear substantial steel toe foot wear, gloves and work clothes.
Be aware of any spilled fuel, oil or other contaminating substances.

After each cut, remove dirt and debris from the machine surface, the discharge tunnel and the grass collector.

## WASHING (FIG. 22)

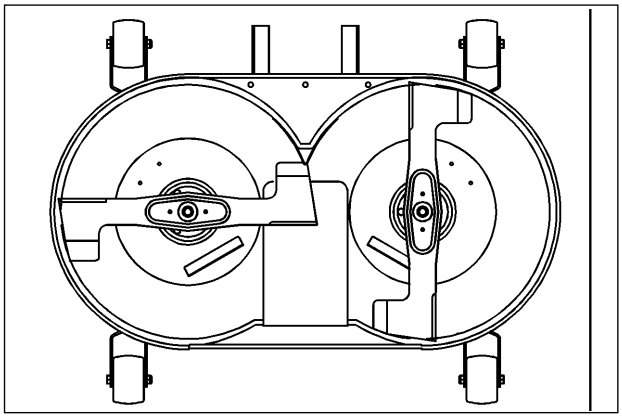

*Fig. 22*

Proceed with the following:
1. Wash the tractor on a levelled surface, with the grass collector mounted on.
2. Wash the inside of the mower deck, and the discharge tunnel (engine off).
3. Dismount the grass collector, wash it, and leave it off to let it dry.
4. Clean the plastic parts of the tractor with a sponge and soap water.

**IMPORTANT**

Avoid water directly near the switches, the dash or any electrical part.

**BE CAREFUL**

To clean the tractor never use high pressure washing machines, or aggressive detergents.

## ENGINE OPERATION

Follow the instruction described in the engine operator's manual, for operation, service (air filter, fuel filter, oil change, spark plugs, etc.)

## CRANKCASE OIL CHANGE

Crankcase oil should be changed after the first 5 hours of operation.

**IMPORTANT**

See engine operating and maintenance manual for proper procedure.

Your tractor is equipped with an oil drain plug.

1. Place a flat bottom 2 litres container beneath the oil valve.
   Note: It may be necessary to raise the left side of the tractor (with blocks under left wheels) to get proper drainage.
2. Turn the oil valve counterclockwise, and pull to drain oil.
   Note: The oil fill cap should be loosened to serve as an air vent.
3. To close oil drain valve, push and turn clockwise.
4. Fill with grade SAE 30 or SAE 10W/30W oil.
5. Reinstall the oil cap.
6. Check that the crankcase oil is at the correct level on the oil dip stick.

The warranty on this lawn tractor does not cover items that have been subjected to operator abuse or negligence. To receive full value from the warranty, operator must maintain lawn tractor as instructed in this manual. The following maintenance check list is supplied to assist operator to properly maintain lawn tractor. This is a check list only. Adjustments referred to will be found in the Adjustment section of this manual.

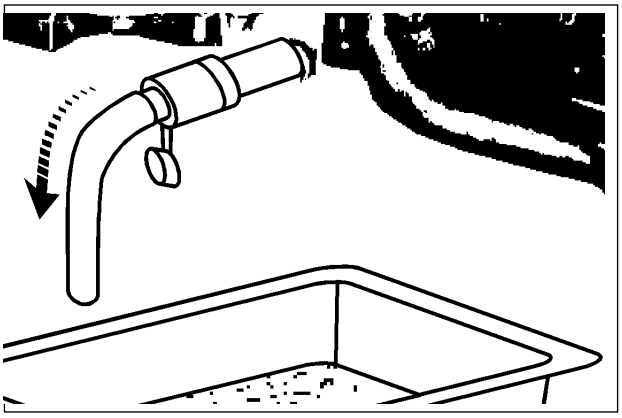

MAINTENANCE CHECKLIST

**SERVICE RECORD**

FILL IN DATES
AS YOU COMPLETE
REGULAR SERVICE

| | BEFORE STORAGE | BEGINNING EACH SEASON | EVERY 100 HOURS | EVERY 50 HOURS | EVERY 25 HOURS | MONTHLY | FREQUENTLY | AFTER FIRST 20 HOURS | AFTER FIRST 5 HOURS | AFTER FIRST 2 HOURS | BEFORE EACH USE | | | | | | | | |
|---|---|---|---|---|---|---|---|---|---|---|---|---|---|---|---|---|---|---|---|
| Check engine oil level | ● | ● | | | | | | | | | | | | | | | | | |
| Change engine oil | | | ● | | | | ●1,2 | | | | ● | | | | | | | | |
| Change spark plug | | | | | | | | | ● | ● | | | | | | | | | |
| Replace air filter paper cartridge | | | | | | | | | ●1,2 | | | | | | | | | | |
| Clean air screen | | | | | | | ● 2 | | | | | | | | | | | | |
| Inspect muffler/spark arrester | | | | | | | | ● | | | | | | | | | | | |
| Replace fuel filter | | | | | | | | | | ● | | | | | | | | | |
| Check battery fluid level/recharge | | | | | | | ● | | | ● | | | | | | | | | |
| Clean battery and terminals | | | | | | | ● | | | | | | | | | | | | |
| Check brake operation | ● | | | | ● | | | | | | | | | | | | | | |
| Check transmission cooling | | | | | | | ● | | | | | | | | | | | | |
| Check tire pressure (Fr: 1,2 bar; Rr: 1,0 bar) | ● | | | | ● | | | | | ● | | | | | | | | | |
| Sharpen or replace mower blades | | | | | | | ● 3 | | | | | | | | | | | | |
| Check for loose fasteners | ● | | | | | | | | | | ● | | | | | | | | |
| Clean lawn tractor | | | | | ● | | | | | | ● | | | | | | | | |
| Disconnect battery cables | | | | | | | | | | | ● | | | | | | | | |
| See lubrication chart | | | | ● | | | ● | | | | ● | | | | | | | | |
| Adjust mower deck drive cog belt | | | | ● | | | | ● | | | | | | | | | | | |

**NOTES:** 1. Change more often when operating under a heavy load or in high temperatures (35°C and above). 2. Service more often when operating in dirty or dusty conditions. 3. Replace more often when mowing in sandy soil.

**TO BLOCK UP THE TRACTOR**

When the tractor is to be blocked up, use a jack lift it on support stands. Block up the tractor as follows:

1. Place a jack under the rear axle transmission and lift the rear end of the tractor.
2. Place two stands under the rear axle, one stand at the inner side of each rear wheel.
3. Lift the front end and place two stands under the front axle beam, one stand at the inner side of each wheel spindle.

**CAUTION**

At no time during maintenance or adjustment, the tractor can be lifted more than 50 cm from level position, without taking the following precautions:

1. Remove fuel from the tank and run the engine until the carburettor is dry.
2. Remove battery (See Battery removal paragraph in the Maintenance section).
3. Remove oil from crankcase.

**LUBRICATION**

For lubrication frequency see Maintenance check list. For lubrication points and type of lubricant, see Lubrication chart. The transmission has been lubricated for life.

**ENGINE MAINTENANCE**

See Engine operating and maintenance manual for maintenance instructions.

## LUBRICATION (FIG 23)

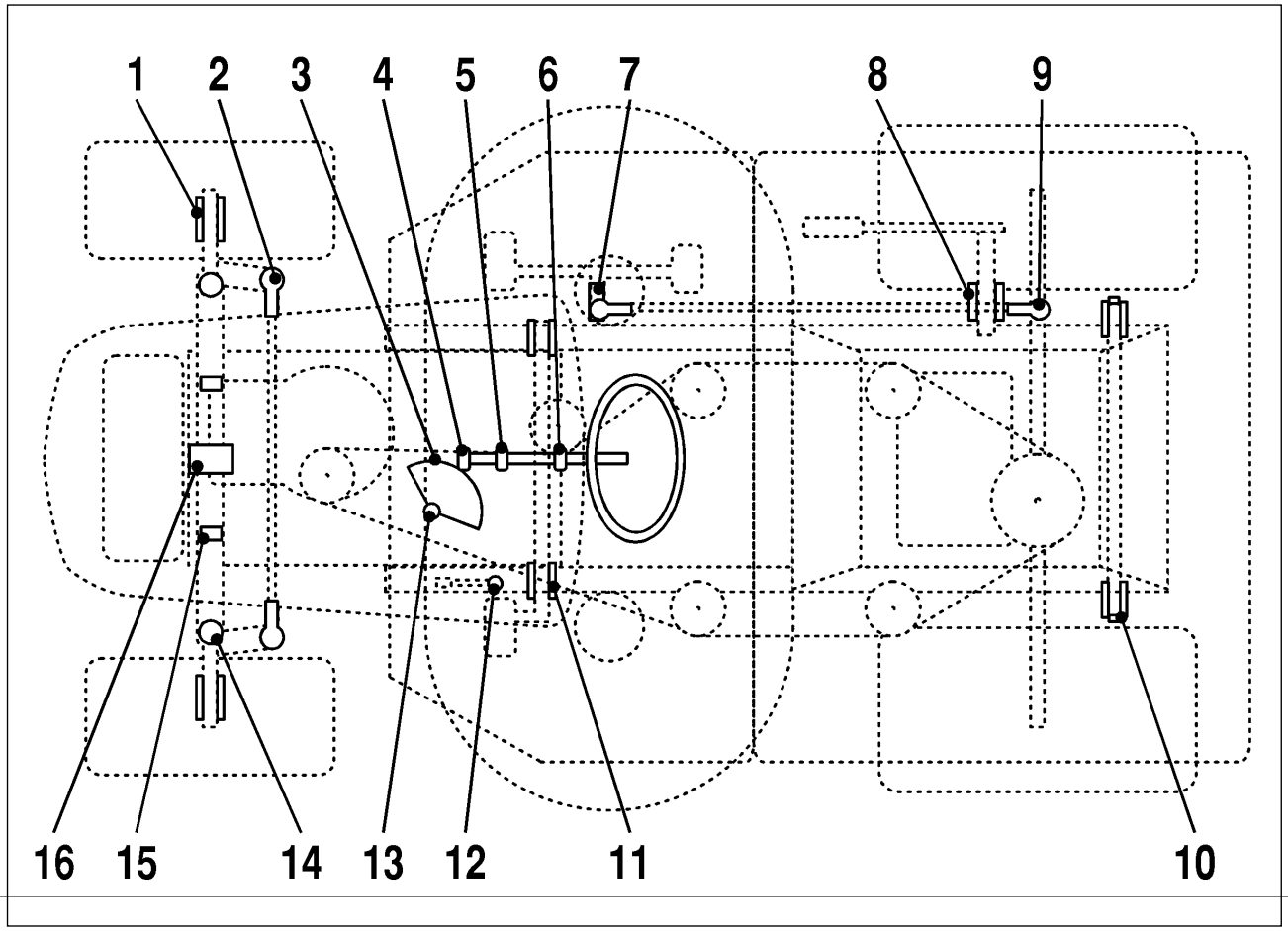


*Fig. 23*

## LUBRICATION LIST

| Item | Name | Number | Term-hours | Lubricant |
|---|---|---|---|---|
| 1 | Front wheel - grease fitting | 2 | 25 | Grease |
| 2 | Steering ball-joints | 4 | 50 | Oil |
| 3 | Steering sector gear | 1 | 50 | Grease |
| 4 | Steering pinion gear | 1 | 25 | Grease |
| 5 | Steering shaft bearing | 1 | 50 | Oil |
| 6 | Steering shaft bearing | 1 | 50 | Oil |
| 7 | Movement lever - grease fitting | 1 | 50 | Oil |
| 8 | Shaft hub for lifting the mower deck | 1 | 50 | Oil |
| 9 | Moving ling ball-joints | 4 | 50 | Oil |
| 10 | Diagonal shaft - grease fitting | 2 | 25 | Grease |
| 11 | Brake pedal hub | 2 | 50 | Oil |
| 12 | Parking brake ring | 1 | 50 | Oil |
| 13 | Steering bearing | 1 | 25 | Grease |
| 14 | Left & Right spindle - grease fitting | 2 | 25 | Grease |
| 15 | Mower deck hinged pin | 6 | when dismounted | Grease |
| 16 | Front axle pivot pin | 2 | when dismounted | Grease |

The bearings in idler pulley and retainer pulleys are life time lubricated. Gear box is filled with oil.

**DANGER**

Lead acid batteries generate explosive gases. Keep sparks, flame and smoking materials away from battery. Always wear eye protection when around batteries.

## BATTERY MAINTENANCE (FIG. 24)

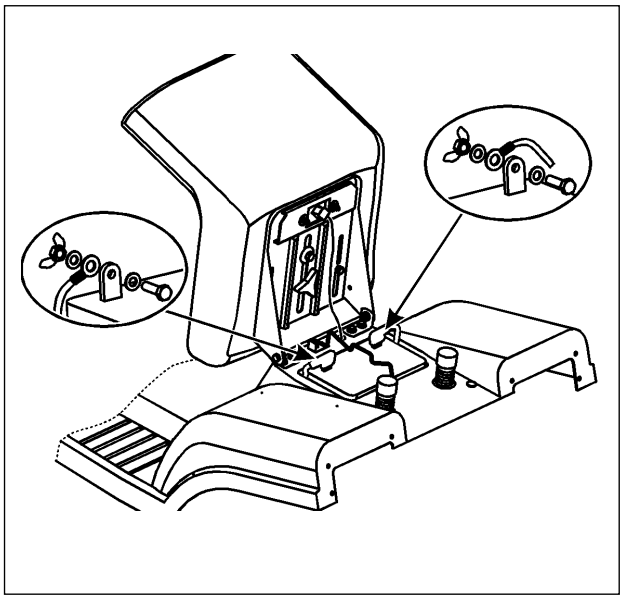

*Fig. 24*

When starter operates properly and battery connections are clean and tight, but cranking difficulty is experienced, battery may not be charged. Battery should be taken to a qualified service station and tested, or charge the battery with battery charger (See page 7)

If engine will not start right away under normal cranking speed, continued cranking will run down the battery and may cause damage to the starter. Check ignition and fuel systems and correct any faults.

The battery should be kept clean.

If the top has an accumulation of dirt or grease, remove the battery from lawn tractor for cleaning. The battery should be cleaned with a mild solution of baking soda and water. Brush this on, keeping vent plugs tightly in place to prevent any solution from entering cells.

Allow the solution to work for a few minutes, then rinse with clean water and wipe battery dry.

If battery terminals are corroded, clean with a wire brush and coat terminals with petroleum jelly.

**DANGER**

Be sure to reinstall battery in the same position and properly reconnect battery cables (red to positive, black to negative).

Proper care will lengthen battery life. When replacement becomes necessary, use battery of same size and type for continued trouble-free service (see Repair parts manual).

**DANGER**

Always disconnect negative (black) cable first. Removing positive cable first can result in sparks if the wrench touches any metal surface. Be sure battery hold-down bracket does not touch battery terminals and causes a spark.

**DANGER**

Always connect positive (red) cable first. Connecting negative cable first can result in sparks if the wrench touches any metal surface. Be sure battery hold-down bracket does not touch battery terminals and causes a spark.

## SPARK PLUG MAINTENANCE

Spark plug should be checked periodically for excessive carbon and gap. Use a wire feeler gauge to check spark plug gap and set 0,7 mm (see Engine operating and maintenance manual).

## AIR FILTER MAINTENANCE

Air filter should be cleaned and/or replaced every 25 hours of operation under normal conditions; more often under dusty conditions. To clean air filter see Engine operating and maintenance manual.

## HEADLIGHT BULB REPLACEMENT (FIG. 25 AND 26)

Lift the hood up. The headlight bulbs are secured in the sleeve with bayonet sockets.

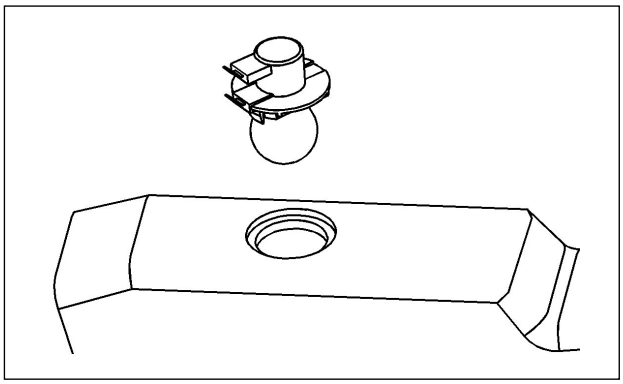

*Fig. 25*

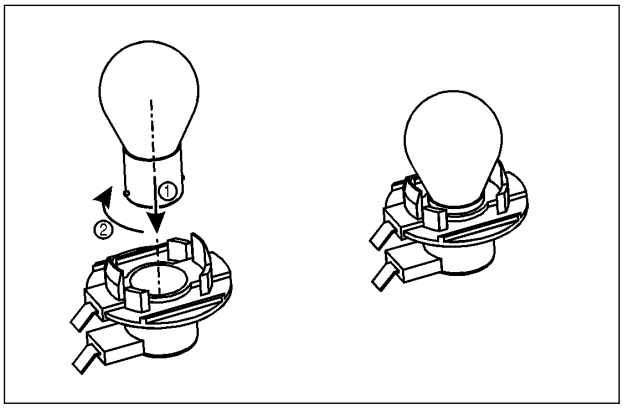


*Fig. 26*

## FUSE EXCHANGE

The fuse box is placed under the dash.
Proceed as follows:

1. Lift the hood up.
2. Pick out the fuse and replace it by another one of the same value (15A).
   If it is still impossible to start the engine, call your service dealer.

## WHEEL EXCHANGE (FIG. 27)

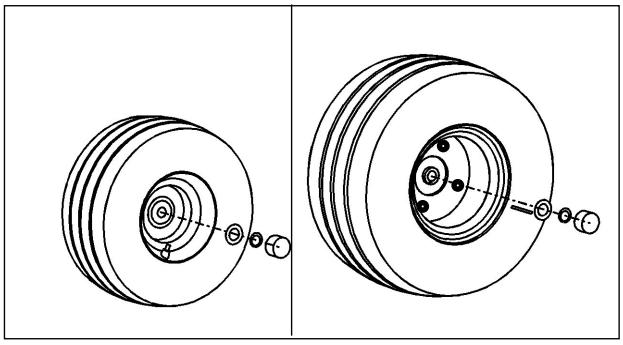

*Fig. 27*

Proceed as follows:

1. Switch off ignition.
2. Lift up the tractor and place it on stands.
3. Remove plastic cover.
4. Dismount the retaining ring, the flat washer, and remove the wheel. ***Note:*** For a rear wheel, watch the key and the key groove.

## TRACTOR BRAKE ADJUSTMENT (FIG. 28)

Your tractor is equipped with a disc brake mounted on the transaxle.

**To check the brake operation:**

1. Place the tractor on a flat surface, and stop the engine.
2. Place the transmission disengagement by-pass lever in the reverse position (Fig 15)
3. Depress the brake pedal enough to latch the parking brake lever in the engaged position (refer to Fig. 14).
4. If you cannot push the tractor, the brake is adjusted correctly and is functioning.
5. If you can push the tractor, the brake is too loose and should be tightened.

**To adjust loose brake:**

1. Place the transmission disengagement by-pass lever in the reverse position, and depress the brake pedal to latch the parking brake lever in the engaged position.
2. Turn the brake adjusting nut clockwise until you cannot push the tractor.
3. Check again the tractor brake adjustment, as described above.

**To adjust tight brake:**

1. Place the transmission disengagement by-pass lever in the reverse position.
2. Turn the brake adjusting nut counterclockwise, until you can push the tractor.
3. Check again the tractor brake adjustment. While operating the tractor, check the stopping distance. If the tractor requires more than 1 meter to stop at high speed in the highest gear, the brake must be adjusted.

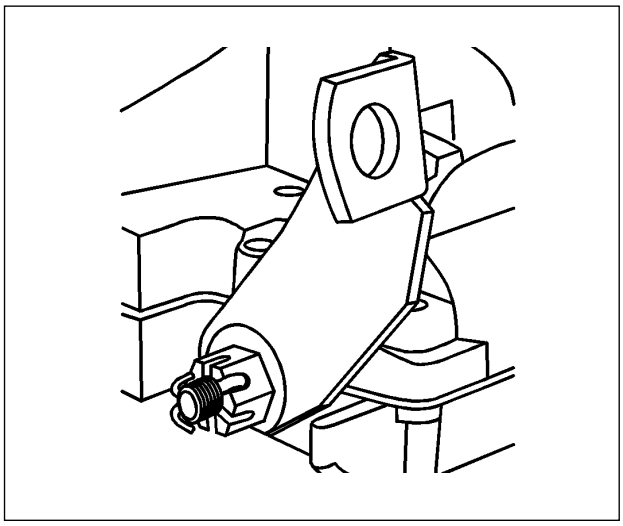

*Fig. 28*

## THE GRASS COLLECTOR OVERLOAD WARNING SYSTEM (ZP 98/1 MODEL)

Important note: This system only works in "AUTO" switch position. (see operations/controls section of manual).
The grass collector capacity has been designed to hold a substantial volume of grass.
The overloading of this intended capacity may result in clogging of the discharge tunnel creating a potentially hazardous condition. As a safety precaution, the tractor is equipped with an overload warning system.
As a result of an acumulation of a predetermined volume of grass clippings an overload protection switch located inside the grass collector will be mechanically activate.
The signal from this switch is interpreted by the "SMART CONTROL MODULE" distinguishing between random impulse actuation which are ignored & only accepting signals exceed a minimum of 1 second + to prevent nuisance activation.
An audible warning device "BUZZER" will be activated providing an intermittent "BEEP" for a 3 second duration. The cutting system will be automatically switched off at the end of the "BEEP" cycle indicating that the grass collector must be emptied prior to continuing further.

## TEST PROCEDURE TO VERIFY PROPER FUNCTION OF THE OVERLOAD WARNING SYSTEM

Since this system is considered to be an important safety feature, it is recommended that the following test procedure be performed on a regular basis very carefully following all the necessary safety regulations & precautions.
The battery must be fully charged prior to this test.
The "AUTO-MAN" switch must be in the "AUTO" position.
Insert the ignition key & start the engine.
Switch on the cutting system.
Manually activate & maintain in this position for the duration of this test the overload protection switch located inside the grass collector.
The audible warning "BUZZER" signal cycle should start after the 1st second.
After a 3 second period both the "BUZZER" & the cutting system will stop operating.
The warning system is in functional order if all of the abov e steps have been complete as indicated above.
**Please consult your local dealer if the test procedure was not completed successfully.**
The cutting system can be re-activated after emptying of the grass collector by either one of the following options:

Activate the "RESET" switch or
Turn of & then on again the switch for the cutting system engagement.

## SERVICING

In the event of system failure, there is a manual position "MAN" switch option which allows for a temporary over-ride of the overload warning system. It is recommended that this be only used as a back-up & only until necessary repairs can be arranged. A temporary by-pass service connector has been included in the original tractor kit & should be installed while the system is being serviced. This service connector will provide a shunt path & will shut-off hte cutting system immediately upon receiving a signal from the collector overload switch indicating a full grass collector condition.

## BLADE REPLACEMENT ( FIG. 29)

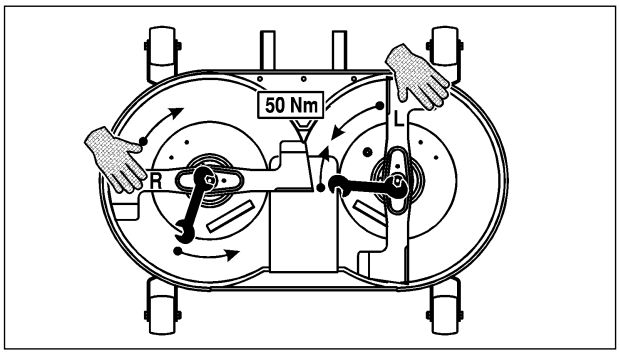


The cutting blades should be sharp and balanced to run smoothly. Blades should have correct amount of lift for proper cutting and discharge of clippings. The lift is created by the upturned bent tip edges of the blade ends. As the cutting edges of the blades wear, the bent tip edges also wear decreasing the blade lift. Decreased cutting and collecting ability results.

**IMPORTANT**

It is recommended blades be replaced when the upturned ends show signs of wear.

**IMPORTANT**

As soon as the blades strike any solid object the shear bolts will break. Immediately stop the engine! Check the blades! Replace the broken shear bolts only with factory originals. For installation refer to fig. 30. Check to make sure that all blade mounting bolts are tightened.

**To remove blades:**

1. Remove the mower deck.
2. When replacing the blades, be sure all parts are reassembled in proper order and securely tightened, or severe vibrations will occur (See fig. 30). Bent tip edges of blades must be toward top of the mower deck, or blades will not cut.

**IMPORTANT**

The right blade has a left hand thread bolt.

**DANGER**

Do not handle the blades with bare hands. Wear gloves or wrap the blades with newspaper or other material while removing or installing the blades.

3. Reinstall the mower deck.

## SHEAR PINS (FIG. 30)

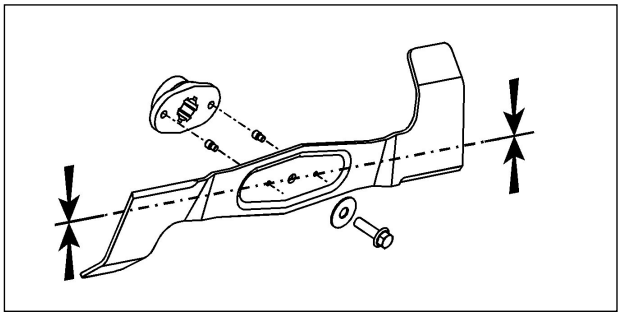

*Fig. 30*

## BLADE SHARPENING

**IMPORTANT**

Great care should be taken to keep the blades balanced. An unbalanced blade will cause excessive vibrations and eventual damage to the engine or the mower.

1. The blade can be sharpened with a file or on a grinding wheel. Do not attempt to sharpen while on mower.
2. Place the center hole of the blade over the end of a screwdriver, placed horizontally. If the blade is balanced, it should remain in a horizontal position. If either end of the blade moves downward, sharpen the heavy end until the blade is balanced.

## DRIVE BELTS ADJUSTMENT (FIG. 31, 32 AND 33)

**IMPORTANT**

The life time of the belts and their proper operation depends on their right adjustment. After a few hours of operation, they must be inspected and may need adjustment.

The three belts are located beneath the main frame. One belt drives the transaxle. The other one transmits the power from the clutch to the mower deck. The third one drives and synchronizes the two blades together.

## TRANSMISSION DRIVE BELT (FIG. 31)

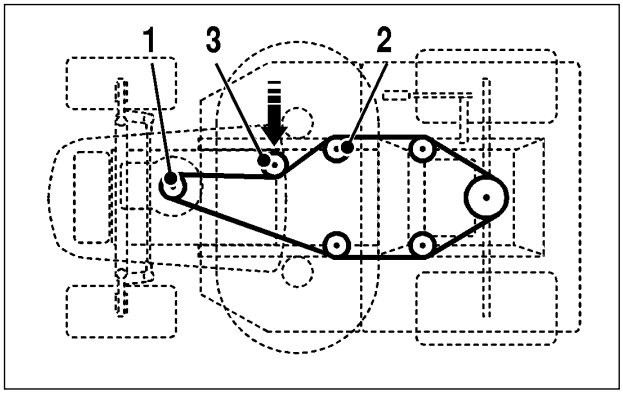


*Fig. 31*

1. engine pulley
2. pulley
3. idler pulley

Adjust the tension of the belt with the pulley 3.

## MOWER CLUTCH BELT (FIG. 32)

The tension of the belt is automatically adjusted with the spring loaded idler pulley.

NOTE: Longer end of hook-spring must be connected to the tractor chassis. Short end of hook-spring must be connected to mower deck.

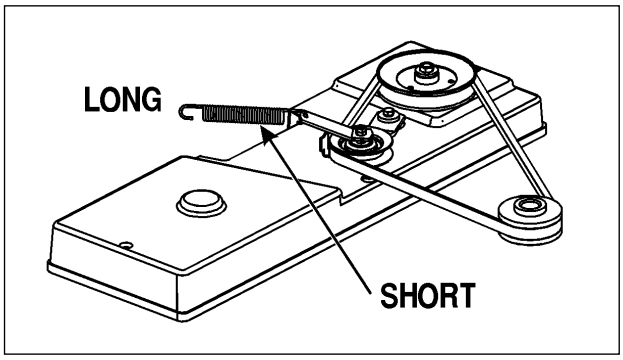


*Fig. 32*

## MOWER DECK BELT (FIG. 33)

## ADJUST THE MOWER COG BELT

NOTE: It is recommended that the mower cog belt be adjusted after 20 hours of operation as the new belts will stretch slightly during the initial break in period.

## A. CUTTING OAN REMOVAL (FIG 41)

1. Lower the cutting pan to the lowest position.
2. Pull idler arm assembly in and remove V-belt from pulley.
3. Disconnect the spring from the engagement lever.

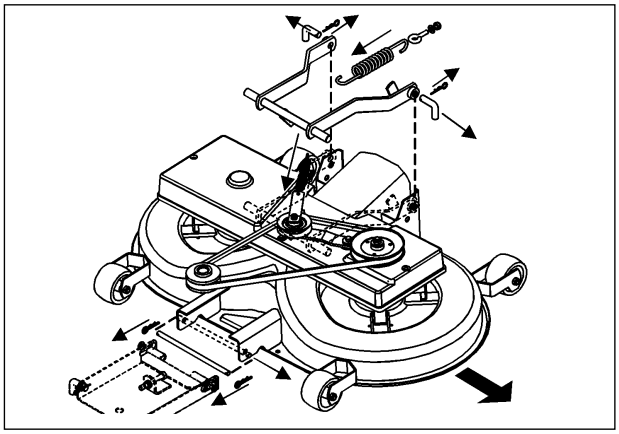

*Fig. 41*

4. Remove overload switch plate..
5. Lift tunnel to release the lower part from the two welded pins that connect it to the mower deck assembly.
6. Pull out tunnel rearwards approximately 10 cm (100 mm). Secure the tunnel to prevent it from falling back down.
7. Remove the hair pin clips from front pin and from the two rear pins.
   NOTE: It is recommended to loosen the large spring for safety and to facilitate reinstalation of cutting pan. To do so you must remove tunnel.
8. Pull out rear pin from one side and then use a pair of pliers to pull second rear pin from other side.

**CAUTION**

If the large spring has not been loosened, the pivot arm assembly will not spring up with force. Do not place hands or fingers above the pivot arm assembly and use pliers when pulling out second rear pin.

9. pull out fron pin
10. Remove V-belt from electro magnetic clutch
11. Slide cutting pan out from side of tractor

## B. ADJUSTMENT PROCEDURES FOR COG BELT TENSION

1. Remove cutting pan from tractor, follow procedure described in A.
2. Remove V-belt pulley and idler arm assy.
3. Remove plastic belt cover.
4. Loosen the two hex nuts on the cog idler pulley on tension bracket idler.
5. Adjust nut M10 until the specified tension at cog belt is reached. (See Fig 33)

6 Re-tighten the two hex nuts on the cog idler pulley and the belt is now adjusted correctly.
7. To re-install the cutting pan - reverse the procedure.

Note: It is possible but not desirable to adjust the cog belt tension without removing the cutting pan assembly form the tractor. In this case follow step 2 through 8 from the above procedures.

**DANGER**

This cog belt must be properly adjusted. If not, the blades can contact and the belt will be destroyed and the cutting system will be damaged.

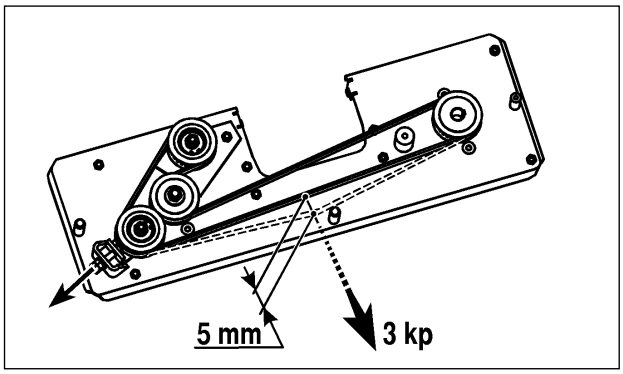


*Fig. 33*

**DANGER**

On impact with any hard objects, the blade shear bolts will break and the cog belt will be damaged!
The cog belt ***must be inspected.***

**Be careful!**
The two blades must be positioned 90 degrees to each other.

**Replacement:**
Use always genuine parts.

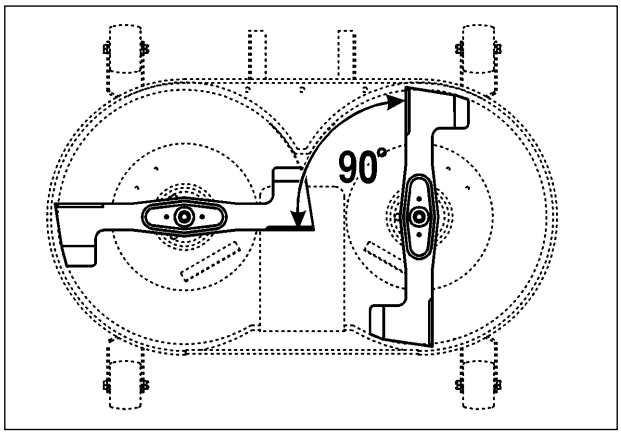


*Fig. 34*

## ADJUSTMENT PROCEDURES FOR THE HEIGHT ADJUSTMENT CABLE ASSY

1. Place the tractor on a flat surface, concrete, if possible.
2. Move the lower pin of the front adjustment suspension into the bottom position of the slotted holes by adjusting the two nuts M12 on the front suspension.
3. Using the height adjustment lever, lift the cutting pan to the mid-position.
4. Insert a 6 mm thick board under the rear cutting pan gauge wheels.
5. Let the cutting pan down until the rear gauge wheels rest on the board.
6. Position the height adjustment lever to position 1.
7. Keep adjustment self-locking nut 5/16-18 at the end of the height adjustment cable assyuntil the cable is slightly tight only.
8. Lift the cutting pan and take out the board.

## TORQUE SPECIFICATIONS

| | |
|---|---|
| **Cutting system:** | |
| Mower cog belt | See Fig 33 |
| Blade bolt LH | 50 Nm |
| Blade bolt RH | 50 Nm |
| Housing bolts M8x30 | 32 Nm |
| Self locking nut M12 (Pulley) | 65 Nm |
| Hexagon socket screw M8x25 (Idler arm) | 25 Nm |
| **Steering tooth gear fasteners:** | |
| Screw M8x20 | 25 Nm |
| Lock nut M12 | 80 Nm |
| **Engine-transmission drive:** | |
| Exhaust screws | 16 Nm |
| Crank shaft bolt | 108 Nm |
| Screw M10x40 (Idler pulles) | 40 Nm |
| Self-locking nut M8 (Idler arm) | 15-20 Nm |

# WIRING DIAGRAM

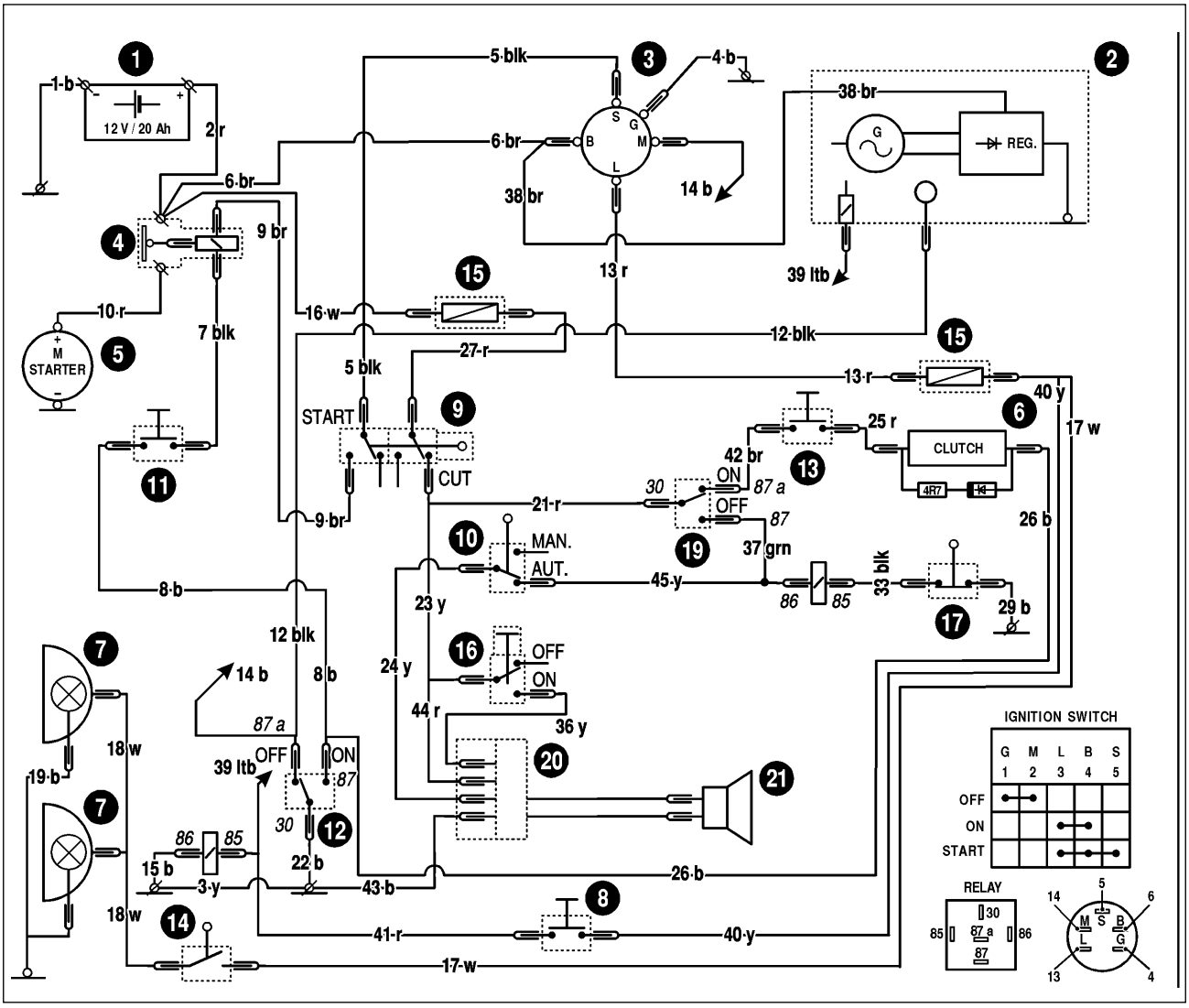


1. Battery
2. Engine
3. Ignition switch
4. Starter relay
5. Starter
6. Magnetic clutch (diode + resistor)
7. Headlights
8. Seat switch
9. START-CUT switch
10. AUTO-MAN switch
11. Brake interlock switch
12. Relay for seat switch
13. Grass collector switch-upper
14. Headlights switch
15. Fuse 15 A and 5A
16. Grass collector microswitch-down
17. Re-engage switch
19. El. magnetic stop relay
20. Buzzer box
21. Buzzer

**COLOR LEGEND OF WIRES:**

| | |
|---|---|
| **B** | - BLUE |
| **R** | - RED |
| **BR** | - BROWN |
| **W** | - WHITE |
| **BLK** | - BLACK |
| **Y** | - YELLOW |
| **GRN** | - GREEN |
| **V** | - VIOLET |
| **GRY** | - GREY |
| **LTB** | - LIGHT BLUE |

# TROUBLESHOOTING GUIDE

| PROBLEM | CORRECTION |
|---|---|
| **Mower cuts ragged or uneven** | 1. Remove any accumulation of grass clippings from underside of mower deck housing.<br>2. Make sure blades are sharp and in good condition (not bent or incorrectly mounted).<br>3. Check blade mounting screws. Blade screws must be tight.<br>4. Check mower deck leveling adjustment per manual. Adjust if necessary.<br>5. Check blade belt tension per manual. Adjust if necessary.<br>6. Check quill assemblies for damage or wear. Replace if necessary.<br>7. Check for possible damage to mower deck housing. Repair or replace if necessary. |
| **Mower leaves unmowed strip between blades** | 1. Mowing a heavy stand of grass or grass with excessive surface moisture could allow mower to leave an unmowed strip.<br>2. Forward speed should be adjusted to mowing conditions by gear selection. Engine should be run at full throttle.<br>3. Make sure blades are sharp and in good condition. Replace if necessary.<br>4. Check blade belt tension. Adjust if necessary.<br>5. Check quill assemblies for damage or wear. Replace if necessary.<br>6. Check for damage to mower deck housing. Repair if necessary. |
| **Mower scalps lawn** | 1. Check mower height adjustment setting and readjust if neaded. Scalping is more likely on rough or uneven lawns.<br>2. Check for damage to mower deck housing. repair if necessary.<br>3. Check for bent blades or quills assemblies. Replace if necessary.<br>4. Check mower deck leveling adjustment and adjust if necessary. |
| **Mower will not discharge clippings** | 1. Remove any accumulation of grass clippings from underside of mower deck housing.<br>2. Wet conditions can cause the discharge funnel and underside of mower deck to become plugged with clippings. Do not mow wet grass.<br>3. Forward speed should be adjusted to mowing conditions by gear selection. Engine should be run at full throttle.<br>4. When mowing long grass make first cutting in high position, then recut at normal cutting height.<br>5. Check drive belt tension per manual. Adjust if necessary.<br>6. If blades have been replaced, make sure they have been properly mounted. |
| **Blade drive belt comes off during use** | 1. Blade drive belt may suffer internal damage to cords when it comes off during use. If belt comes off after checking all steps below, replace with a new original equipment belt.<br>2. Check belt tension per manual. Adjust if necessary.<br>3. Check belt guide. Correct clearance is 1,5 mm from belt when blade engage lever is engaged.<br>4. Check mower deck leveling adjustment per manual. Adjust if necessary.<br>5. Check for and remove any foreign objects interfering with belt travel.<br>6. Check all pulleys on mower deck. A bent or split pulley could cause problems. Replace if necessary.<br>7. Check engine drive pulley inner surface. If inner surface is rough or split, pulley should be replaced.<br>8. Check blade engagement idler assembly for wear. Replace necessary parts. |
| **Blade drive belt slips** | 1. If grass is too high or wet, belt slippage may occur.<br>2. Check belt for wear or damage. Replace if necessary.<br>3. Check blade belt tension per manual. Adjust if necessary.<br>4. Check blade drive belt tension spring. If spring is stretched or damaged, replace spring. |
| **Blade drive belt wears excessively** | 1. Check all belt guides. Correct clearance is 1,5 mm from belt when blade engage level is engaged.<br>2. Check for and remove any foreign objects interfering with belt travel.<br>3. Check pulleys for damage. Replace if necessary.<br>4. Make sure blade brake is clearing belt when mower clutch lever is engaged. Adjust or replace if necessary.<br>5. Make sure mower deck leveling adjustment is correct. Adjust when necessary.<br>6. Check blade belt tension per manual. Adjust if necessary. |
| **Blades will not engage** | 1. Check belt. If worn or broken, replace. If belt is too loose, make belt adjustment.<br>2. Check engagement spring on deck engagement idler. If broken or damaged, replace.<br>3. Check for and remove any foreign objects interfering with engagement idler travel. |

# TROUBLESHOOTING GUIDE

| PROBLEM | CORRECTION |
|---|---|
| **Extreme vibration occurs when blade is engaged** | 1. Check blades and make sure they are not bent, out of balance or loose. Replace if necessary.<br>2. Check belt for burn spots or irregularities that might cause vibrations. Replace if necessary.<br>3. Check quill assemblies for damage or wear. Replace if necessary.<br>4. Check for worn or damaged blade engagement parts. Repair or replace if necessary.<br>5. Check engine drive pulley inner surface. If inner surface is rough or split, pulley should be replaced.<br>6. Check under side of mower deck housing for accumulation of clippings. Remove accumulated clippings.<br>7. Check for loose or damaged engine mounts. Tighten or replace as necessary.<br>8. Check blade belt tension per manual. Adjust if necessary. |
| **Unit drive belt slips** | 1. Check unit drive belt adjustment. Ajust if necessary.<br>2. Check for damaged or broken clutching idler spring. Replace if necessary.<br>3. Check belt for wear or damage. Replace if necessary.<br>4. Check for and remove any foreign objects obstructing clutching idler mechanism.<br>5. Check for split engine or transmission pulley. Replace if necessary.<br>6. On Shift-on-the-Go units, check for proper free play in cable adjustment. |
| **Mower scalps lawn** | 1. Check mower height adjustment setting and readjust if needed. Scalping is more likely on rough or uneven lawns.<br>2. Check for damage to mower deck housing; repair if necessary.<br>3. Check for bent blades or quill assemblies. Replace if necessary.<br>4. Check mower deck levelling adjustment and adjust it if necessary. |
| **Unit drive belt squeals when brake is applied** | 1. Check lawn tractor drive belt adjustment and lawn tractor brake adjustment per manual. Adjust if necessary.<br>2. Check for and remove any foreign objects obstructing clutching idler mechanism. |
| **Unit drive belt comes off during use** | 1. Check belt tension. Adjust if necessary.<br>2. Check belt guides. Adjust if necessary.<br>3. Check for split or damaged pulleys. Replace if necessary.<br>4. Check clutching idler pulley alignment. If out of alignment, idler bracket may be bent. Replace if necessary. |
| **Unit will not propel itself when clutch is engaged** | 1. See steps 1 through 5 in Unit drive belt slips section of this chart.<br>2. Check engine, transmission or transaxle pulley for sheared or missing key. Replace if necessary.<br>3. Check transaxle to make sure it is operable. |
| **Extreme vibration occurs when clutch is engaged** | 1. Check for split or damaged pulley. Replace if necessary.<br>2. Check belt for irregularities or burned spots. Replace if necessary.<br>3. Make sure belt tension is correct. Adjust if necessary.<br>4. Check clutching idler assembly for wear or damage. Replace parts if necessary. |
| **Unit will not shift or shifts hard** | 1. Check shifting procedure.<br>2. Check lawn tractor drive belt adjustment and lawn tractor brake adjustment per manual. Adjust if necessary.<br>3. Have transaxle checked by an authorized service dealer. |
| **Steering slips or is loose** | 1. Check for steering sector gear and pinion looseness. If gears are loose, make sector gear adjustment.<br>2. Check ball joints for wear. Replace if necessary. |
| **Engine will not turn over** | 1. Check starting procedure. Make sure starting instructions are followed.<br>2. Check fuse.<br>3. Check battery for charge. Make sure battery has been activated and charged.<br>4. On new units, remove spark plug and check cylinder for accumulation of oil due to improper handling.<br>5. Make visual check of electrical system to make sure all connections and lockout switches are secure.<br>6. Check engine according to engine manufacturer's instructions.<br>7. Have electrical system checked by an authorized service dealer. |
| **Engine turns over but will not start** | 1. Check starting procedure. Make sure starting instructions are followed.<br>2. Make sure fuel tank is filled with clean, fresh fuel.<br>3. Make sure fuel shut-off is open.<br>4. Make sure that throttle is in start or fast position.<br>5. Check engine according to engine manufacturer's instructions.<br>6. Have wiring and lockout switches checked by an authorized service dealer.<br>7. Check fuel filter for obstructions.<br>8. Check for choke usage. |
| **Blocked discharge funnel** | 1. Take away the grass collector, and clean the discharge tunnel. |

# STORAGE

The tractor should be immediately prepared for storage at the end of the season, or if the unit is to be unused for 30 days or more. Fuel, if permitted to stand unused for extended periods (30 days or more), may develop gummy deposits which can adversely affect the engine carburettor and can cause engine malfunction.

**DANGER**

Never store engine with fuel in tank indoors or poorly ventilated enclosures, where fuel fumes may reach an open flame, spark or pilot light as on a furnace, water heater, clothes dryer, etc...
Handle fuel carefully. It is highly flammable and careless use could result in serious fire damage to your person and property.
Drain fuel into an approved container outdoors away from open flame.

To prepare the tractor for storage, proceed as follows:

1. Clean the tractor thoroughly.
2. Inspect the tractor for worn or damaged parts and tighten all loose screws and nuts.
3. Prepare engine for storage (See the engine operating and maintenance manual).
4. Lubricate all points shown in the Lubrication Chart (page 16).
5. Remove the battery (See the Battery removal paragraph, in Assembly section of this manual).
6. Clean the battery as described in the Battery maintenance paragraph of the Maintenance section of this manual. Add clean water to raise level to indicator ring and fully charge the battery. A discharged battery will freeze and may burst. If possible, place the battery in a cool, dry area. Charge the battery overnight every 30 days.
7. Store the tractor in a clean, dry area, and cover it for additional protection.

A yearly check-up or a tune-up by an authorized service dealer is a good way of insuring that your tractor will provide maximum performance for the next season.

**NOTE:** Fuel stabilizer is an acceptable alternative in minimizing the formation of gum deposits during storage. Add stabilizer to the fuel in the fuel tank or storage container. Always follow the mix ratio given by the stabilizer manufacturer. Run the engine at least 10 minutes after adding stabilizer to allow the stabilizer to reach the carburetter. Do not drain the gas tank and carburetter if using stabilizer.

# TECHNICAL SPECIFICATIONS

| | |
|---|---|
| Engine: | 18 HP VANGUARD V-TWIN Briggs & Stratton *<br>18 HP INTEK V-TWIN Briggs & Stratton * |
| Battery: | 12 Volts/22 Ah |
| Front tyres: | 16 X 6.50 - 8 |
| Rear tyres: | 20 X 10.00 - 8 |
| Front tyres pressure: | 100 kPa (1 Bar) |
| Rear tyres pressure: | 70 kPa (0,7 Bar) |
| Transaxle: | HYDRO-GEAR MODEL NO: 310-0650 |
| Forward speed | 0 - 9 km/h |
| Reverse speed | 0 - 4 km/h |
| Turning radius: | 74 cm |
| Cutting heights: | 7 heights: from 25 to 100 mm |
| Mowing size: | Twin-blade; 102 cm |
| Mower deck: | Suspended |
| Blade clutch: | Warner Electro-magnetic clutch |
| Discharge: | Rear, with grass collector as standard |
| Weight (18 HP): | Gross: 262 Kg Net: 247 Kg |
| Tractor dimensions (L x W x H): | 240 x 106 x 110 cm |

**IMPORTANT**
**** Refer to model and type numbers when purchasing replacement parts.***

For improvement purposes, specifications and design are subject to change, without notice.
Please be advised that no legal claims, of whatsoever they might be, can be used upon the information contained in this manual.

When performing repairs, make sure that only genuine parts are used. Use of non-original parts will void the warranty.